TEAR SHEET

Melange Medium Floating Disc Pendant

Item # KW 5612BZ-ALB

Designer: Kelly Wearstler

O/A Height: 64.75"
Fixture Height: 30"
Min. Custom Height: 36"
Width: 10.25"
Canopy: 7" Round
Finishes: AB, BZ, PN
Trim Options: ALB
Lightsource: Dedicated LED
Wattage: 9w (900lm)
Weight: 15 Pounds
Note: Custom Height Available | Alabaster is a Natural Stone | Variations in Color and Texture are Expected

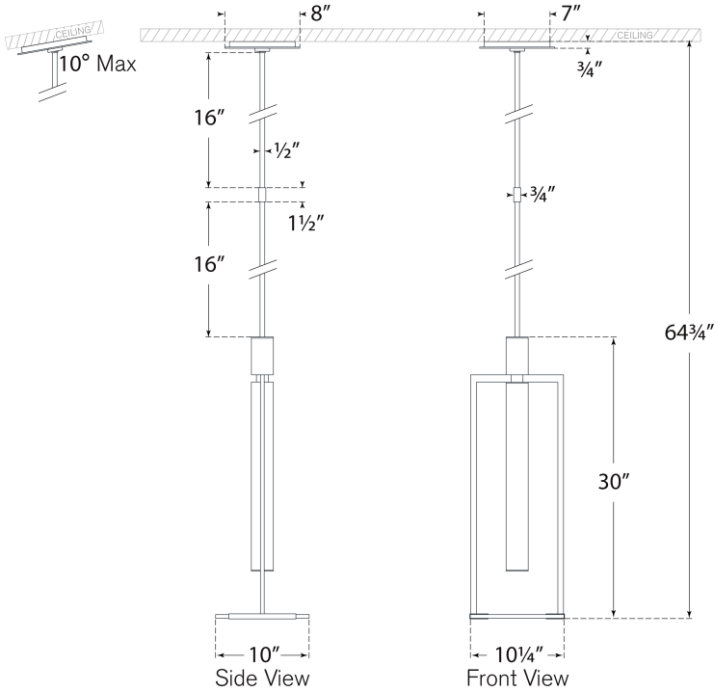

VISUAL COMFORT & CO.

DAMP LED 4